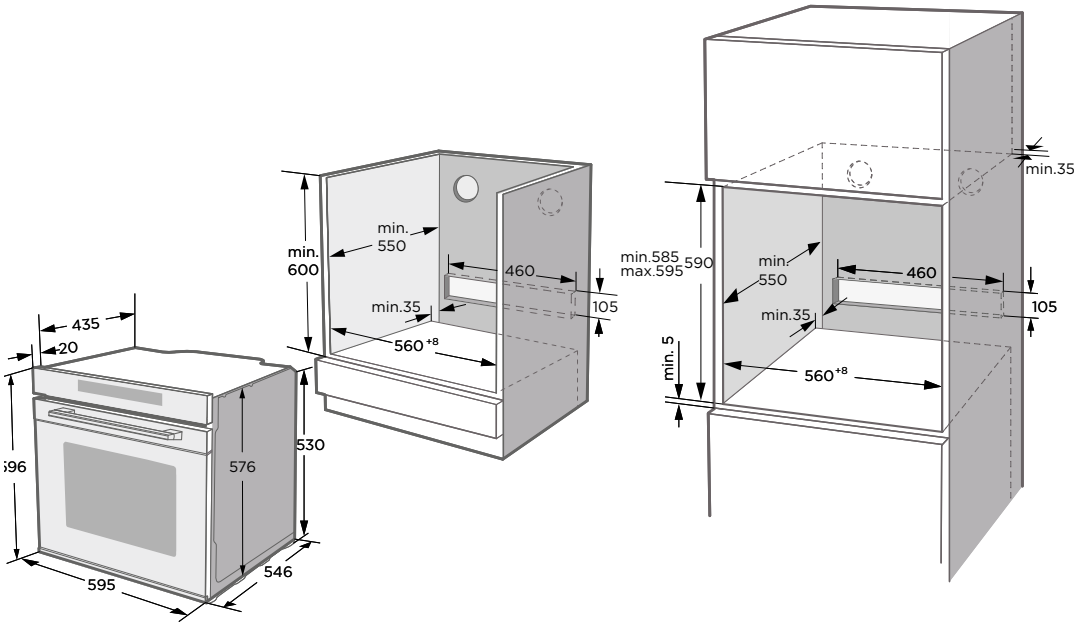


**KBO 1371 S M TC B**

KERNAU