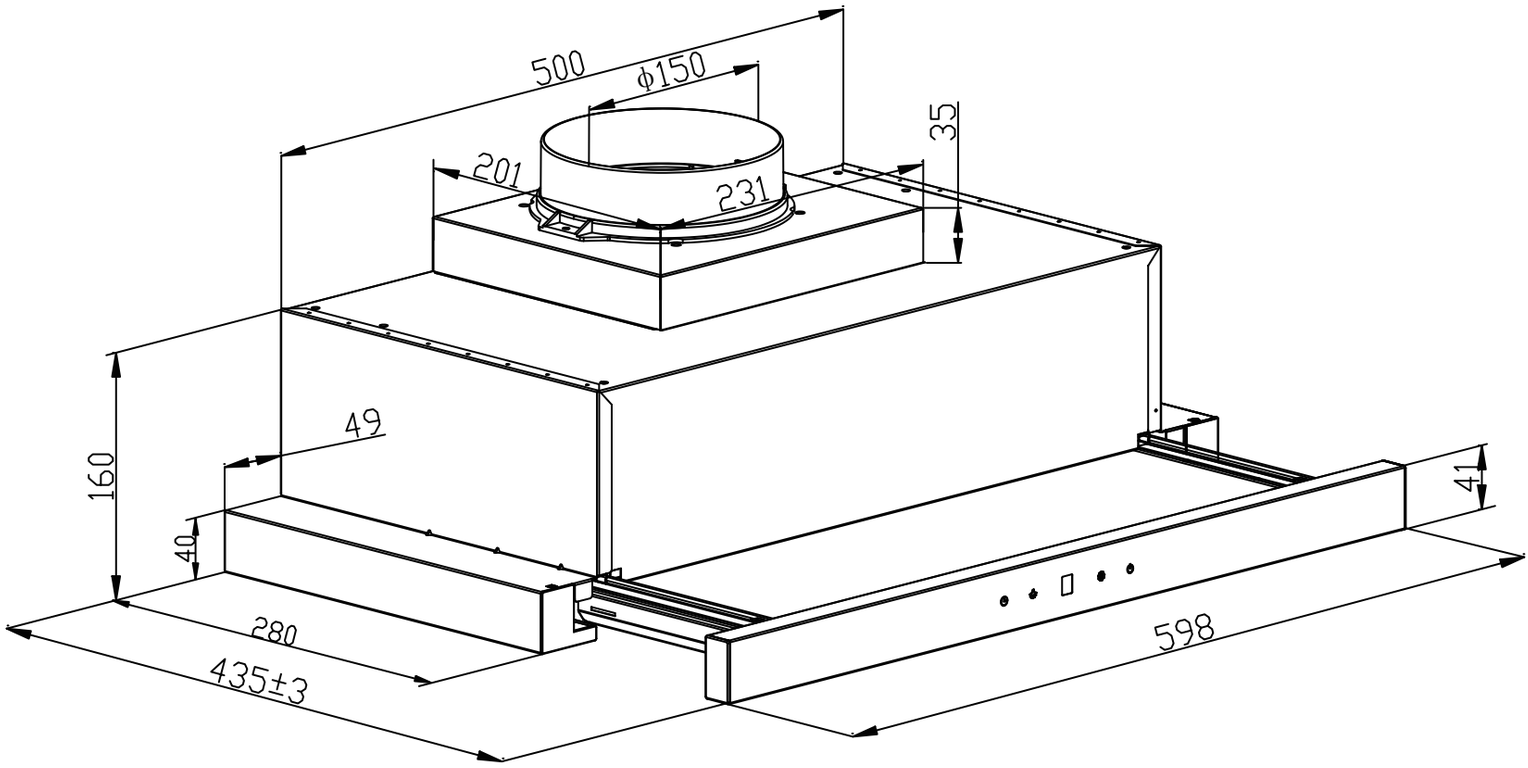

KTH 10.360 B Glass
KTH 10.360 W Glass
KTH 10.360 X Glass

KERNAU