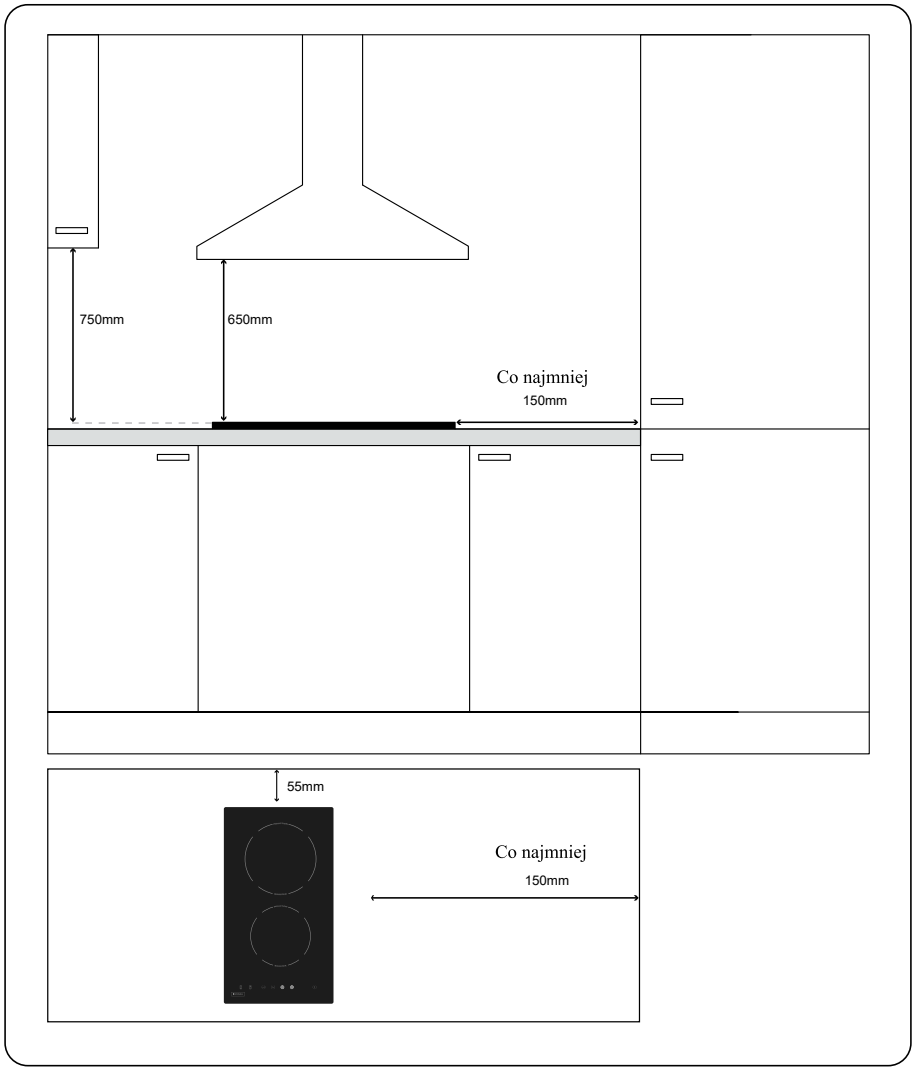

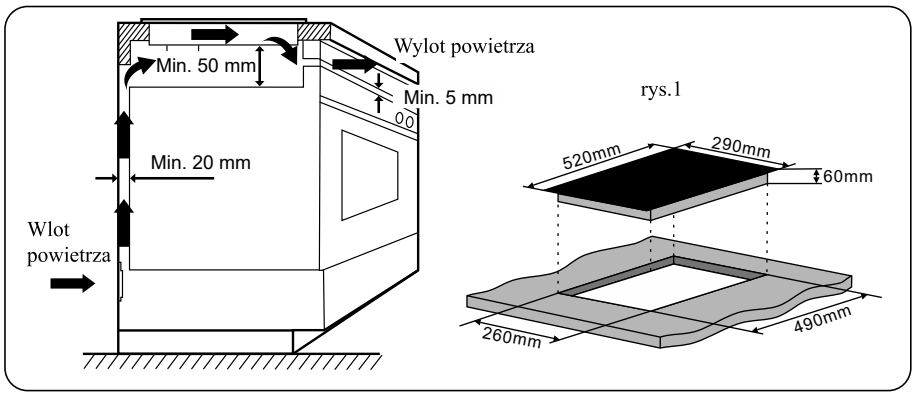

KHC 3212

KERNAU