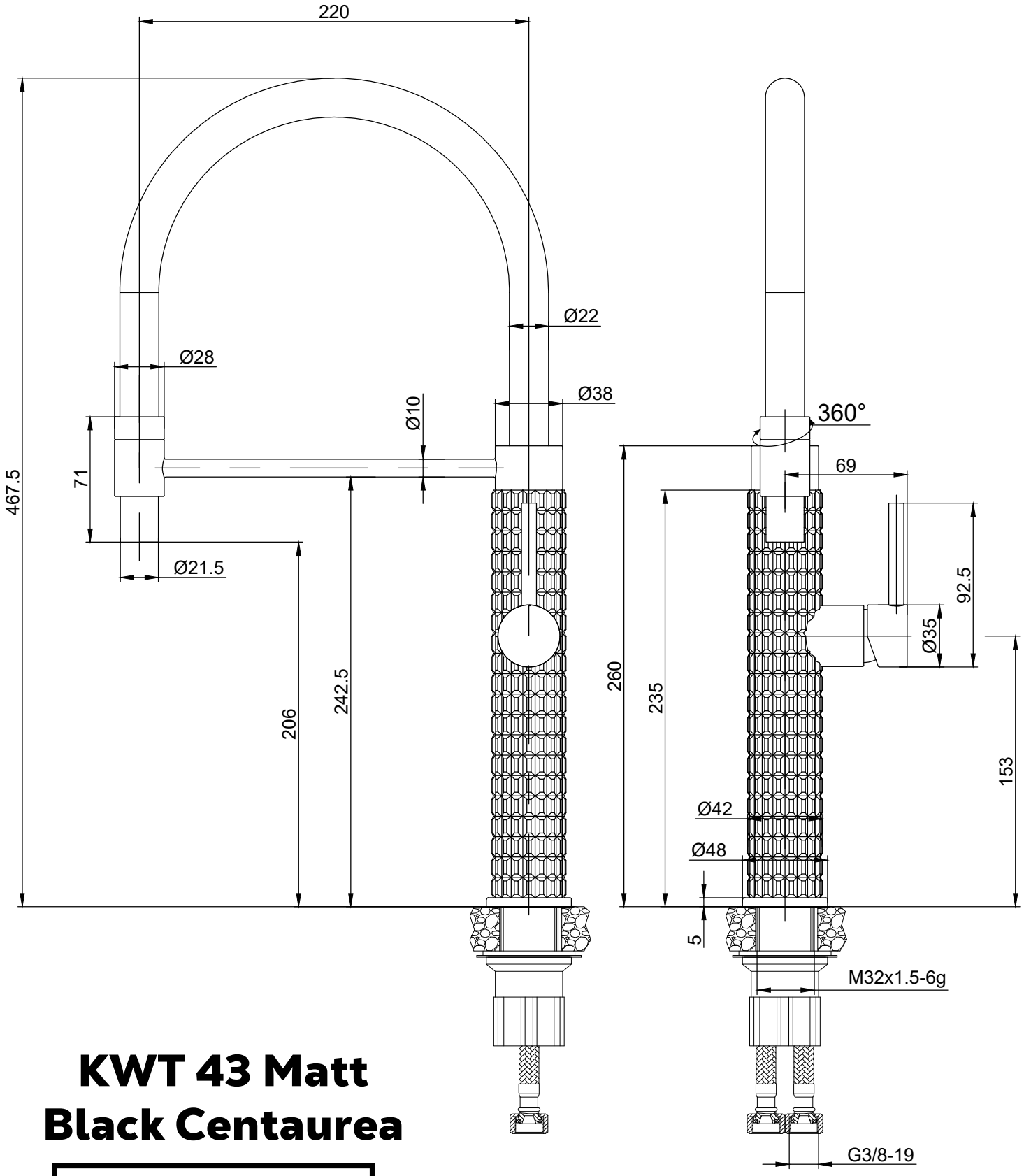

KWT 43 Matt Black Centaurea

KERNAU